Tantalum Product - **TAJ** Series

PRODUCT SPECIFICATIONS :

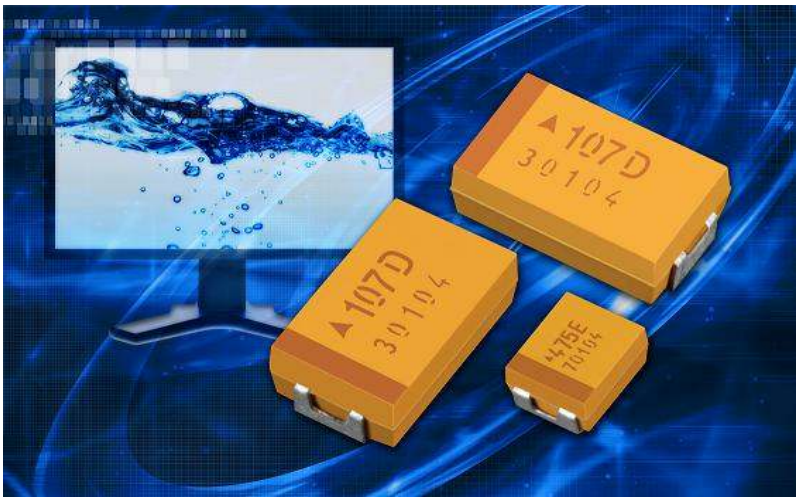

Nominal Capacitance @ 120Hz	22 µF	
Capacitance Tolerance (*)	M = ±20%	
Rated Voltage DC (V_R)	≤ 85°C	16 V
Category Voltage DC (V_C)	≤ 125°C	10 V
Surge Voltage (V_S)	≤ 85°C	20 V
	≤ 125°C	13 V
Temperature Range	-55°C to +125°C	
Direct Leakage Current max. @ V_R	3.5 µA	
Dissipation Factor max. @ 120Hz	10 %	
ESR max. @ 100kHz	2.3 Ohm	
Typical weight (A case)	29 mg	

RoHS COMPLIANT

LEAD-FREE

LEAD-FREE COMPATIBLE COMPONENT

Moisture sensitivity level: meets MSL 1
Reflow specification: meets J-STD-020 standard
100% surge current tested
All technical data relates to an ambient temperature of +25°C, Capacitance and DF are measured at 120Hz, 0.5RMS with DC bias of 2.2V. DCL is measured at rated voltage after 5 minutes.
KYOCERA AVX reserves the rights to supply higher voltage rating in the same case size, to the same reliability standards.

RMS value of Ripple Current (mA) @100kHz			RMS value of Ripple Voltage (mV) @100kHz		
25˚C	85˚C	125˚C	25˚C	85˚C	125˚C
181	163	72	415	374	166

HOW TO ORDER:

TAJ	A	226	M	016	#	NJ
Type	Case code	Capacitance Value	Cap. Tolerance	Rated DC	Packaging	Suffix

DRAWING AND DIMEN A

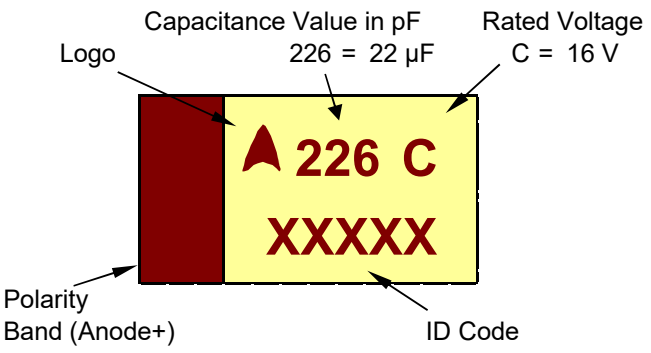

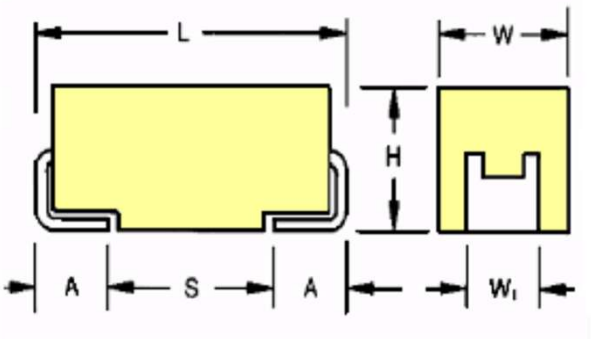

Tantalum Product - **TAJ** Series

CASE DIMENSIONS: millimetres

Case							
EIA	Size	L ±0.2	W +0.2 –0.1	H +0.2 –0.1	A +0.3 –0.2	S min.	W1 ±0.2
3216-18	A	3.2	1.6	1.6	0.8	1.1	1.2

PACKAGING INFORMATION:

Reel Size (#)	R = 7” Reel Pure Tin Termination	S = 13” Reel Pure Tin Termination	A = 7” Reel Gold Plated Termination	B = 13” Reel Gold Plated Termination
Quantity	2000	8000	2000	8000
Tape Width	8 mm	8 mm	8 mm	8 mm

Issued by: KYOCERA AVX Technical Marketing Team
Tantalum Division
More details at: www.kyocera-avx.com
Version: 10/2021

NORTH AMERICA
Tel: +1 864-967-2150

CENTRAL AMERICA
Tel: +55 11-46881960

EUROPE
Tel: +44 1276-697000

ASIA
Tel: +65 6286-7555

JAPAN
Tel: +81 740-321250

WWW.KYOCERA-AVX.COM

NOTICE: Specifications are subject to change without notice. Contact your nearest KYOCERA AVX Sales Office for the latest specifications. Specifications are typical and may not apply to all applications. All statements, information and data given herein are believed to be accurate and reliable, but are presented without guarantee, warranty, or responsibility of any kind, expressed or implied. Statements or suggestions concerning possible use of our product are made without responsibility or warranty that any such use is free of patent infringement and are not recommendations to infringe any patent. The user should not assume that all safety measures are indicated or that other measures are indicated or that measures may not be required. All samples are provided for testing purposes only. Provision of samples shall not constitute any offer of sale nor shall it constitute any commitment of any kind. Samples may not be incorporated in any product offered for commercial sale. Recipient assumes all risks and liability resulting from such testing. Samples are for the exclusive use of the direct recipient and shall not be sold, lent, given, or otherwise transferred to any other party. All unused samples shall be destroyed or returned to KYOCERA AVX.